XFPd-2SM-1310nm-20LC

1310nm XFP single-Mode for 10GbE/10GFC/SDH/SONET
Duplex XFP Transceiver
RoHS6 Compliant

Features

- Supports 9.95Gb/s to 11.1Gb/s bit rates
- Hot-pluggable XFP footprint
- Maximum link length of 20km
- Uncooled 1310nm DFB laser
- Duplex LC connector
- Power dissipation <2.5W
- Built-in digital diagnostic functions
- Case Operating Temperature:

  Standard: 0°C to 70°C

  Industrial: -40°C to 85°C
- Complaint with XFP MSA
- Compliant to IEEE 802.3ae 10GBASE-LR/LW
- Compliant to 10GFC 1200-SM-LL-L

Applications

- SONET OC-192 LR-1，SDH STM I-64.1 at 9.953Gbps
- 10GBASE-LR/LW 10G Ethernet
- 1200-SM-LL-L 10G Fibre Channel
- 10GE over G.709 at 11.09Gbps
- OC192 over FEC at 10.709Gbps

Ordering information

Part No.	Data Rate	Laser	Fiber Type	Distance	Temp.
XFPd-2SM-1310nm-20LC*Note1	10G	DFB	SMF	20km	Standard
XFPd I -2SM-1310nm-20LC	10G	DFB	SMF	20km	Industrial

Note1: Standard version.

Regulatory Compliance

Feature	Standard
Electrostatic Discharge (ESD) to the Electrical Pins	MIL-STD-883G Method 3015.7
Electrostatic Discharge to the enclosure	EN 55024:1998+A1+A2 IEC-61000-4-2 GR-1089-CORE
Electromagnetic Interference (EMI)	FCC Part 15 Class B EN55022:2006 CISPR 22B :2006 VCCI Class B
Immunity	EN 55024:1998+A1+A2 IEC 61000-4-3
Laser Eye Safety	FDA 21CFR 1040.10 and 1040.11 EN (IEC) 60825-1:2007 EN (IEC) 60825-2:2004+A1
Component Recognition	UL and CUL EN60950-1:2006
RoHS6	2002/95/EC 4.1&4.2 2005/747/EC 5&7&13

Absolute Maximum Ratings

Parameter	Symbol	Min	Typ	Max	Unit
Maximum Supply Voltage	Vcc3	-0.5		4.0	V
Storage Temperature	TS	-40		85	°C

Recommend operating condition

Parameter	Symbol	Min	Typ	Max	Units
Case Operating Temperature, XFPd-2SM-1310nm-20LC	Tc	0		70	°C
Case Operating Temperature, XFPd-2SM-1310nm-20LC-I	Tc	-40		85	°C
Supply Voltage 1	Vcc3	3.13		3.45	V

Electrical Characteristics

Parameter	Symbol	Min	Typ	Max	Unit	Note
Supply Voltage	Vcc3	3.13		3.45	V	
Supply Current – Vcc3 supply	Icc3			720	mA	
Module total power	P			2.5	W	

Transmitter						
Input differential impedance	Rin		100		Ω	1
Differential data input swing	Vin,pp	120		820	mV	
Transmit Disable Voltage	VD	2.0		Vcc	V	
Transmit Enable Voltage	VEN	GND		GND+ 0.8	V	
Transmit Disable Assert Time				10	us	
Receiver						
Differential data output swing	Vout,pp	340	650	850	mV	
Data output rise time	tr			38	ps	2
Data output fall time	tf			38	ps	2
LOS Fault	VLOS fault	Vcc – 0.5		VccHOST	V	3
LOS Normal	VLOS norm	GND		GND+0.5	V	3
Power Supply Rejection	PSR	See Note 4 below				4

Notes:

1. After internal AC coupling.
2. 20 – 80 %
3. Loss Of Signal is open collector to be pulled up with a 4.7k – 10kohm resistor to 3.15 – 3.6V. Logic 0 indicates normal operation; logic 1 indicates no signal detected.
4. Per Section 2.7.1. in the XFP MSA Specification.

Optical Characteristics

Parameter	Symbol	Min	Typ	Max	Unit	Ref.
Transmitter						
Optical output Power	P	-3		+1	dBm	
Launch power min (OMA)	P_{OMA}			-3.5	dBm	
Optical Wavelength	λ	1290		1330	nm	
Optical Extinction Ratio	ER	6			dB	
Side Mode Supression ratio	SSRmin			30	dB	
Average Launch power of OFF transmitter	POFF	-30			dBm	
Tx Jitter	Txj	Compliant with each standard requirements				
Receiver						
Receiver Sensitivity @ 10.7Gb/s	RSENS			-15	dBm	

Maximum Input Power	Pmax	+0.5			dBm	
Optical Center Wavelength	λC	1270		1600	nm	
Receiver Reflectance	Rrx			-14	dB	
LOS De-Assert	LOSD			-17	dBm	
LOS Assert	LOSA	-29			dBm	
LOS Hysteresis		1			dB	

Pin Descriptions

Pin	Logic	Symbol	Name/Description	Ref.
1		GND	Module Ground	1
2		VEE5	Optional –5.2 Power Supply – Not required	
3	LVTTL-I	Mod-Desel	Module De-select; When held low allows the module to , respond to 2-wire serial interface commands	
4	LVTTL-O	$\overline{\text{Interrupt}}$	Interrupt (bar); Indicates presence of an important condition which can be read over the serial 2-wire interface	2
5	LVTTL-I	TX_DIS	Transmitter Disable; Transmitter laser source turned off	
6		VCC5	+5 Power Supply-Not required	
7		GND	Module Ground	1
8		VCC3	+3.3V Power Supply	
9		VCC3	+3.3V Power Supply	
10	LVTTL-I	SCL	Serial 2-wire interface clock	2
11	LVTTL-I/O	SDA	Serial 2-wire interface data line	2
12	LVTTL-O	Mod_Abs	Module Absent; Indicates module is not present. Grounded in the module.	2
13	LVTTL-O	Mod_NR	Module Not Ready;	2
14	LVTTL-O	RX_LOS	Receiver Loss of Signal indicator	2
15		GND	Module Ground	1
16		GND	Module Ground	1
17	CML-O	RD-	Receiver inverted data output	
18	CML-O	RD+	Receiver non-inverted data output	
19		GND	Module Ground	1
20		VCC2	+1.8V Power Supply – Not required	
21	LVTTL-I	P_Down/RST	Power Down; When high, places the module in the low power stand-by mode and on the falling edge of P_Down initiates a module reset	
			Reset; The falling edge initiates a complete reset of the module including the 2-wire serial interface, equivalent to a power cycle.	
22		VCC2	+1.8V Power Supply – Not required	
23		GND	Module Ground	1

24	PECL-I	RefCLK+	Reference Clock non-inverted input, AC coupled on the host board – Not required	3
25	PECL-I	RefCLK-	Reference Clock inverted input, AC coupled on the host board – Not required	3
26		GND	Module Ground	1
27		GND	Module Ground	1
28	CML-I	TD-	Transmitter inverted data input	
29	CML-I	TD+	Transmitter non-inverted data input	
30		GND	Module Ground	1

Notes:

1. Module circuit ground is isolated from module chassis ground within the module.
2. Open collector; should be pulled up with 4.7k – 10k ohms on host board to a voltage between 3.15V and 3.6V.
3. A Reference Clock input is not required.

Hostboard Connector Pinout

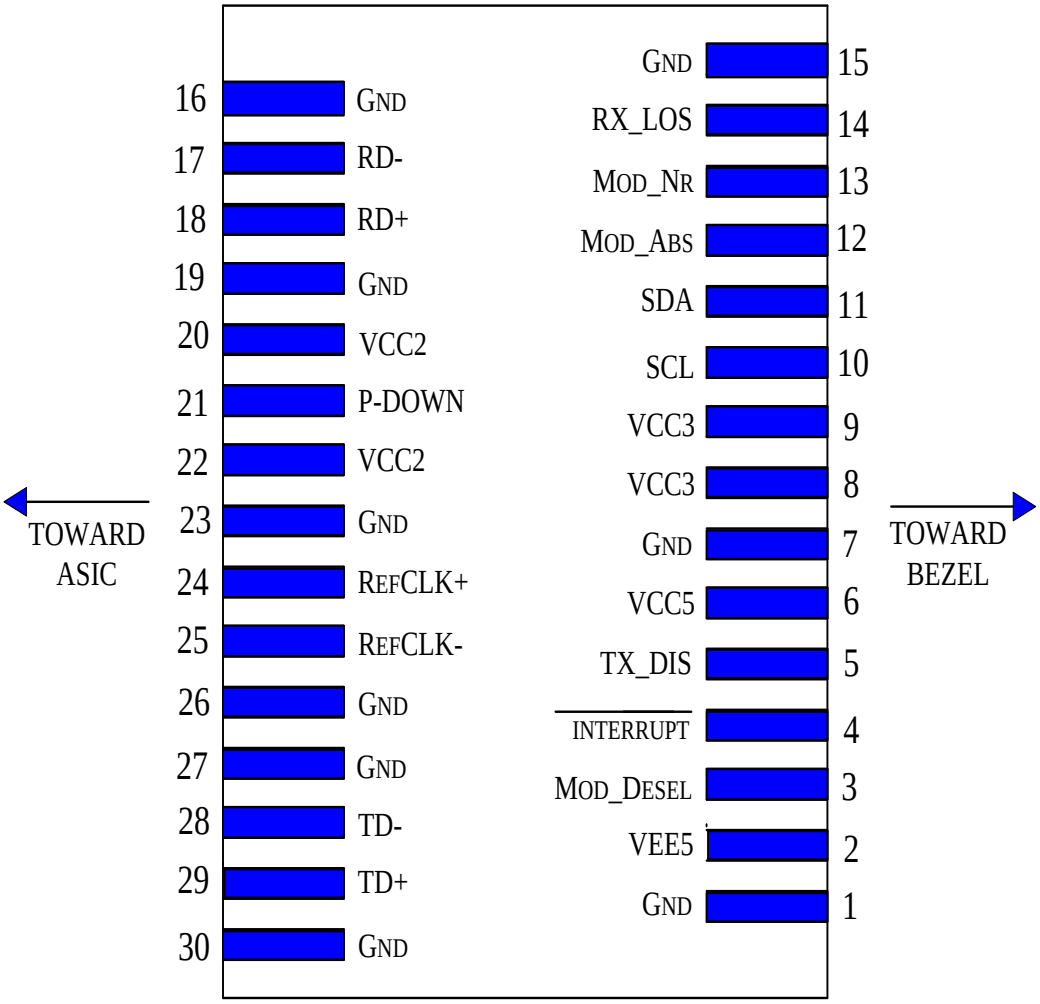

Diagram of Host Board Connector Block Pin Numbers and Name

General Specifications

Parameter	Symbol	Min	Typ	Max	Units	Ref.
Bit Rate	BR	9.95		11.1	Gb/s	1
Bit Error Ratio	BER			10^{-12}		2
Max. Supported Link Length	LMAX		20		km	1

Notes:

1. SONET OC-192 LR-1，SDH STM I-64.1 ,10GBASE-LR/LW, 1200-SM-LL-L
2. Tested with a 2^{31} – 1 PRBS

Digital Diagnostic Functions

FoxGate's XFPd-2SM-1310nm-20LC Small Form Factor 10 Gb/s (XFP) transceivers are compliant with the current XFP Multi-Source Agreement (MSA) Specification Rev 4.5.

As defined by the XFP MSA, FoxGate XFP transceivers provide digital diagnostic functions via a 2-wire serial interface, which allows real-time access to the following operating parameters:

- Transceiver temperature
- Laser bias current
- Transmitted optical power
- Received optical power
- Transceiver supply voltage

It also provides a sophisticated system of alarm and warning flags, which may be used to alert end-users when particular operating parameters are outside of a factory-set normal range.

The operating and diagnostics information is monitored and reported by a Digital Diagnostics Transceiver Controller inside the transceiver, which is accessed through the 2-wire serial interface. When the serial protocol is activated, the serial clock signal (SCL pin) is generated by the host. The positive edge clocks data into the XFP transceiver into those segments of its memory map that are not write-protected. The negative edge clocks data from the XFP transceiver. The serial data signal (SDA pin) is bi-directional for serial data transfer. The host uses SDA in conjunction with SCL to mark the start and end of serial protocol activation. The memories are organized as a series of 8-bit data words that can be addressed individually or sequentially. The 2-wire serial interface provides sequential or random access to the 8 bit parameters, addressed from 000h to the maximum address of the memory.

Recommended Host Board Power Supply Circuit

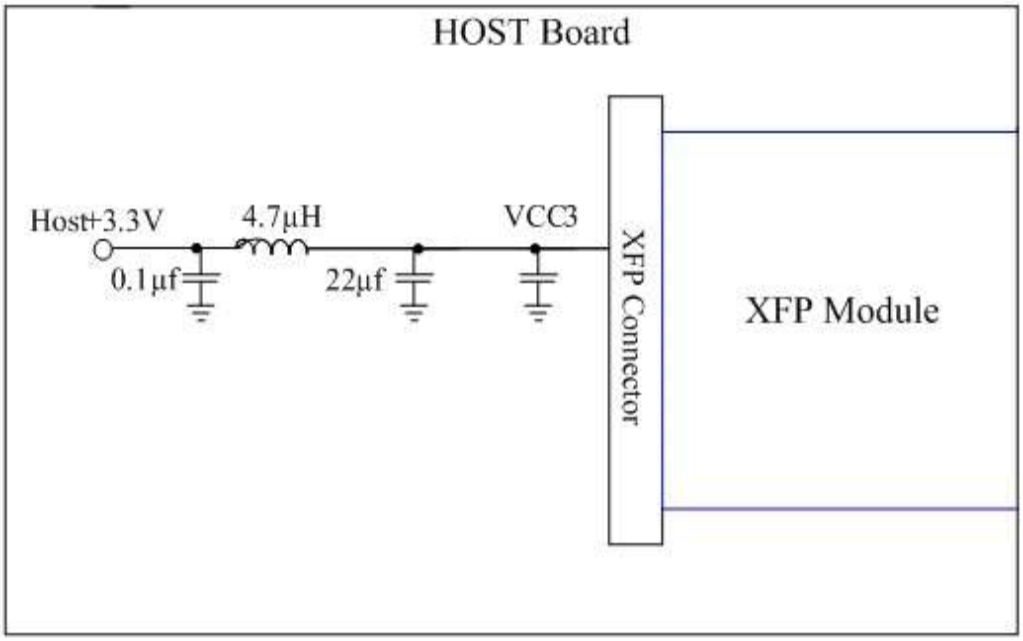

Recommended High-speed Interface Circuit

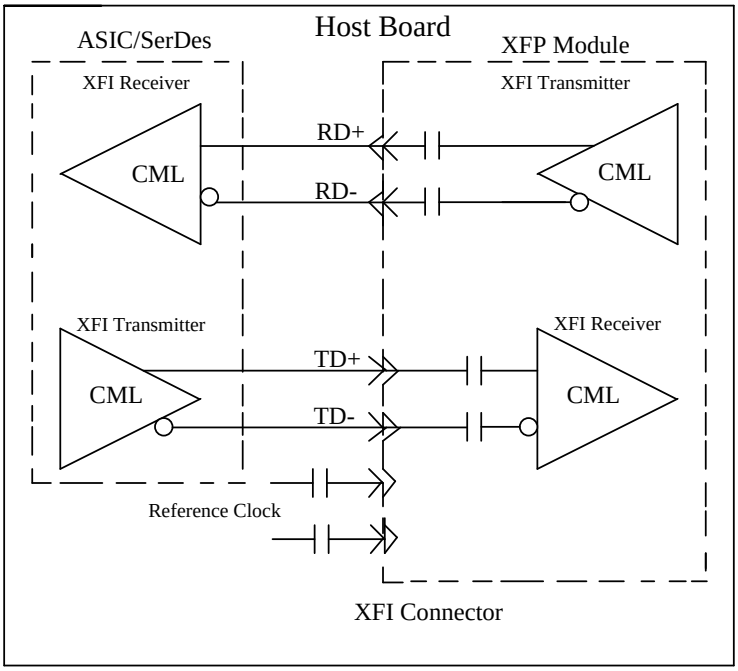

Mechanical Specifications

FoxGate's XFP transceivers are compliant with the dimensions defined by the XFP Multi-Sourcing Agreement (MSA).

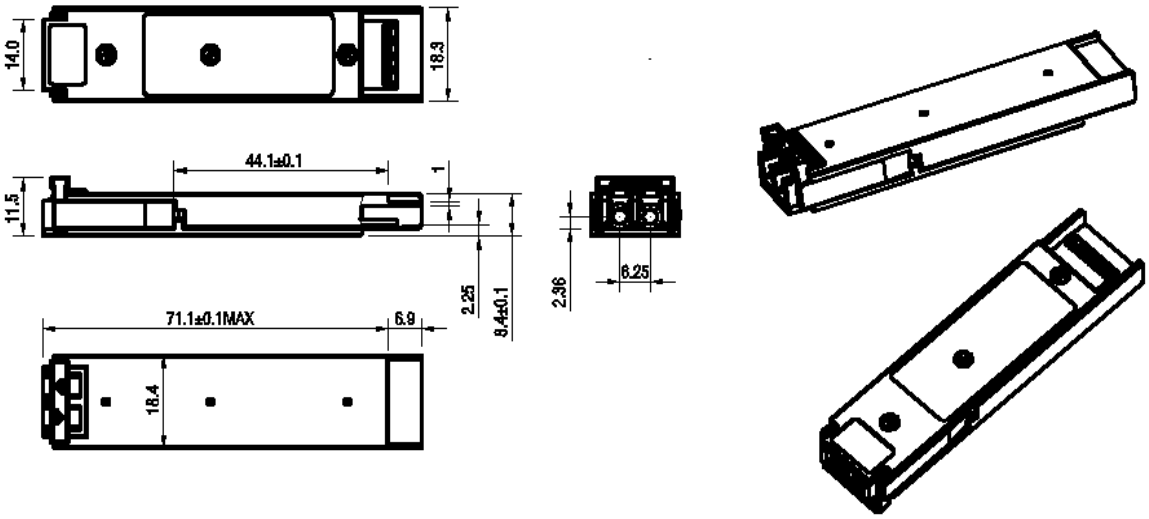

Eye Safety

This single-mode transceiver is a Class 1 laser product. It complies with IEC-60825 and FDA 21 CFR 1040.10 and 1040.11. The transceiver must be operated within the specified temperature and voltage limits. The optical ports of the module shall be terminated with an optical connector or with a dust plug.

Obtaining Document

You can visit our website:

http://deps.ua

Or contact FOXGATE V4.e listed at the end of the documentation to get the latest documents.

Revision History

Revision	Initiate	Review	Approve	Revision History	Date
V1.b	Tim	Kelly		Released.	July 14, 2008
V1.c	Cathy	Kelly		Add industrial product.	Dec 30, 2009
V1.d	Kelly.			Change the logo.	Jan 4, 2010
V1.e	Cathy			Updated optical characteristics.	November 2, 2010
V2.a	Townie	Kelly		Correct some mistakes.	Sep 8, 2011
V2.b	Abby	Kelly		Update LOS De-assert/Assert, Vcc supply.	Sep 6,2012

Notice:

FoxGate reserves the right to make changes to or discontinue any optical link product or service identified in this publication, without notice, in order to improve design and/or performance. Applications that are described herein for any of the optical link products are for illustrative purposes only. FoxGate makes no representation or warranty that such applications will be suitable for the specified use without further testing or modification.

Contact:

Add: 18, Bubnova Str.,

Kyiv, Ukraine, 03040

Tel/fax: +380 44 323 8888

http://deps.ua

© DEPS.