8 Ports PoE Ethernet Switch
User Manual

VerB 1.2

8 ports PoE Ethernet Switch is an unmanaged Ethernet switch. This product provides 1 Gigabit uplink Ethernet port and 1 Gigabit uplink fiber port and 8* 100Mbps PoE Ethernet ports, support IEEE802.3af/at power supply standard. The product is widely used in secrity surveillance and network project.

Application

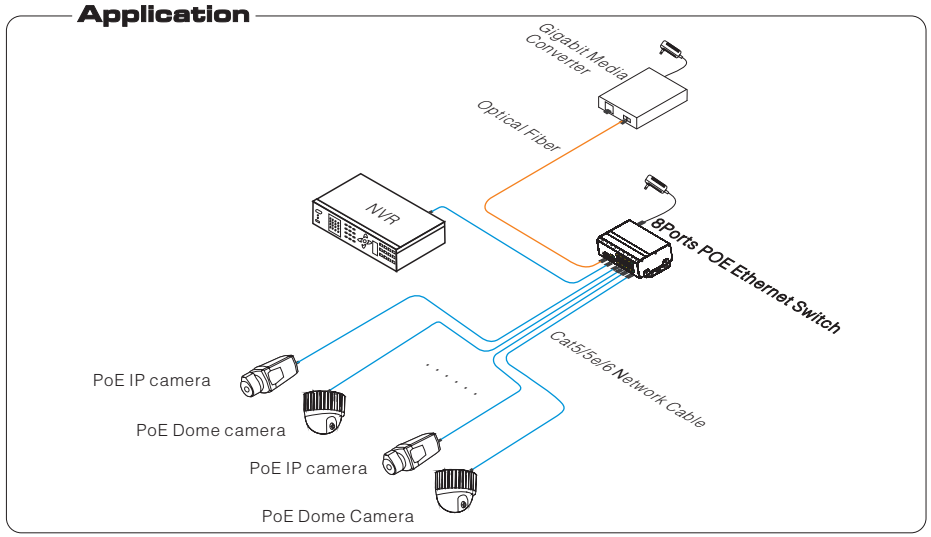

Feature

- Provide 1*1000Mbps uplink fiber port and 1*1000Mbps Ethernet port, 8*10/100Mbps downlink Ethernet ports. 1~8 ports of PoE Ethernet switch support IEEE802.3af/at standard, which could provide Max. 30W supply power for infrared camera with large consumption;
- Reset button of 8 PoE ports which can easily solve problems of IP camera crash, without plugging network cable, is very convenient for system maintenance;
- Under one Key CCTV model, the 1~8 downlink ports can only communicate with uplink ports, the speed of downlink port is limited in 10Mbps and the transmission distance is up to 250m ;
- One Key CCTV mode is off by default, but can start while dialing the switch key on the front board to reset the product;
- Industrial product, fanless wavy metal shell design for good heat dissipation;
- Excellent isolated circuit protection, lighting protection up to 6KV;
- Fast installation, easily operation, convenient for wall, din rail and desktop installation.
- 1 M packet data cache to ensure large capacity data transfer smoothly;
- 8K MAC address, easy for network system expansion;
- Support IEEE802.3X full duplex data control; support port (Auto MDI/MDIX) function ;
- Redundant power design, support power hot backup.

Caution

1) Transmission distance is related to the connecting cable. We suggest to use standard Cat5e/6 network cable to get the best transmission result.
2) If use optical uplink port, customer needs to purchase additional SFP module.
3) The equipment must be connected to anti-thunder grounding ,otherwise the protection level will be greatly reduced ; please use NO. 20th or above wire to connect grounding terminal to the earth.

Board Diagram

Front Board

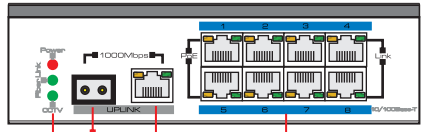

Left Board

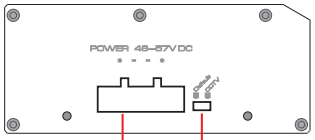

Back Board

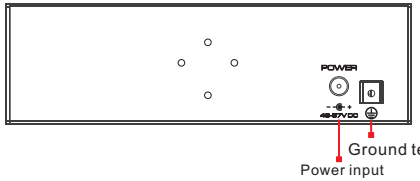

Up Board

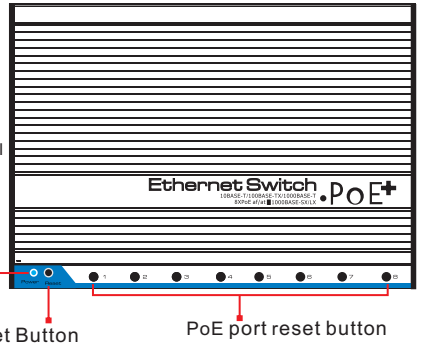

Description:

1) Front board with PoE Ethernet port, the yellow light on the RJ 45 socket indicate PoE status, the green light indicate network status; the yellow light and green light on the uplink network RJ 45 socket indicate network working status; the LED on the left side of SFP optical port indicate power, CCTV and working status of optical port;
2) The left board and back board have a DC48V~57V power input port respectively; equipped with a 120W power adapter by default, the average PoE output of each port is 15W, output of single port is max. 30W.

Installation steps

Please check the following items before installation. If any missing, please contact the dealer.

- POE Ethernet switch 1 pc
- Power adapter 1 pc
- MIT hangers 2 pcs
- Din rail hanger 1 pc
- User manual 1 pc

Please follow the following installation steps

1) Please turn off the signal source and the device's power, installation with power on may damage the device;
2) Use 8pcs network cables to connect 8pcs IP cameras with the product's1~8 RJ45 Ethernet ports;
3) Use another network cable or (optical fiber) to connect switch's UPLINK port with NVR or computer;
4) Connect switch with power adapter;
5) Check if the installation is correct and device is good, make sure all the connection is reliable and power up the system;
6) Make sure every network device has power supply and work normally.

Specification

Item		8 ports PoE Ethernet Switch
Power	Power Supply	Power adapter
	Voltage range	DC48V~57V
	Consumption	＜5W
Ethernet Port Parameter	Ethernet Port	1～8 ports: default mode: 10/100BASE-TX;CCTV mode:10BASE-T; UPLINK Ethernet port:10/100/1000BASE-T; SFP:1000BASE-X
	Transmission Distance	Downlink port: default mode: 0～150m; CCTV mode: 0~250m Uplink port: 0～150m SFP: depends on SFP module performance
	Transmission Medium	Cat5e/6 network cable
	PoE Protocol	IEEE802.3af/at protocol
	PoE Power Supply	End-span
	PoE Energy	Single port≤3 0 W, Whole<120W
Ethernet Exchange Specification	Ethernet Standard	IEEE802.3 10BASE-T; IEEE802.3u 100BASE-TX; IEEE802.3ab 1000BASE-TX; IEEE802.3z 1000-SX/LX; IEEE802.3 X
	Switch Capacity	5.6Gbps
	Packet Forwarding Rate	4.12Mpps
	Packet Buffer	1M
	MAC Address	8K
Indicator Status	Power Indicator Light	Front board: 1 pc red Light Side board: 1 pc red Light
	CCTV Indicator Light	1 pc(green), the green light on Indicates CCTV Mode start
	Optical Port LED indicator	1pc SFP port working indicator light: green
	Uplink Ethernet Port Indicator	1 pc network working status: green light on RJ 45 port
	Downlink Ethernet Port Indicator	1～8 ports : green light indicates network status, yellow light indicates PoE status
Reset	PoE Reset Button	Total 8 pcs, corresponding to 1～8 ports, PoE Function reset
	Reset	1 pc, machine reset
Protection	Port Lighting Protection	6KV , Per: IEC61000-4-5
	ESD	6KV/ 8KV , Per: IEC61000-4-2
Operation Environment	Working Temperature	-40℃~75℃
	Storage Temperature	-40℃~85℃
	Humidity (Non-condensing)	0~95%
Mechanical	Dimension(L×W×H)	159mm×110mm×46.5mm
	Material	Aluminum
	Color	Black
	Weight	575g

Products are subject to change without prior notice

Trouble Shooting

Please find the following solution when the device doesn't work

- Please confirm if the installation is correct;
- Please confirm if the RJ45 cable order is in accordance with the EIA/TIA568A or 568B industry standards;
- The maximum consumption of each PoE port can supply to the PoE device can't over 30 W, please do not use the PoE device with consumption over 30W;
- Please replace a failure device with a properly functioning one to check if the device is broken;
- If the problem still exists, please contact the factory.

RJ 45 Making Method

Tools to make RJ45: wire crimper, network tester.

Wire sequence of RJ45 plug should conform with EIA/TIA568A or EIA/TIA568B standard.

1) Strip off the 2cm insulating layer to expose the 4 pairs UTP cable;

2) Seperate the 4 pairs of UTP cable and straighten them;

3) Line up the 8 separated pieces of cables per EIA/TIA 568A or 568B;

4) Cut the cables to leave 1.5cm bare wire and make sure 8 thread ends are flat and neat ;

5) Insert 8 cables into RJ45 plugs, make sure each cable is inserted in each pin;

6)Then use wire crimper to crimp the RJ45;

7) Do the above 5 steps again to make the another end of the twisted pair and make sure consistent cable order between two ends ;

8) Using network tester to test the cable.

Pin	color
1	white/green
2	green
3	white/orange
4	blue
5	white/blue
6	orange
7	white/brown
8	brown

EIA/TIA 568A

Pin	color
1	white/orange
2	orange
3	white/green
4	blue
5	white/blue
6	green
7	white/brown
8	brown

EIA/TIA 568B

Notice

- Make sure both ends use EIA/TIA568A connection method when using RJ45 port.
- Make sure both ends use EIA/TIA568B connection method when using RJ45 port.